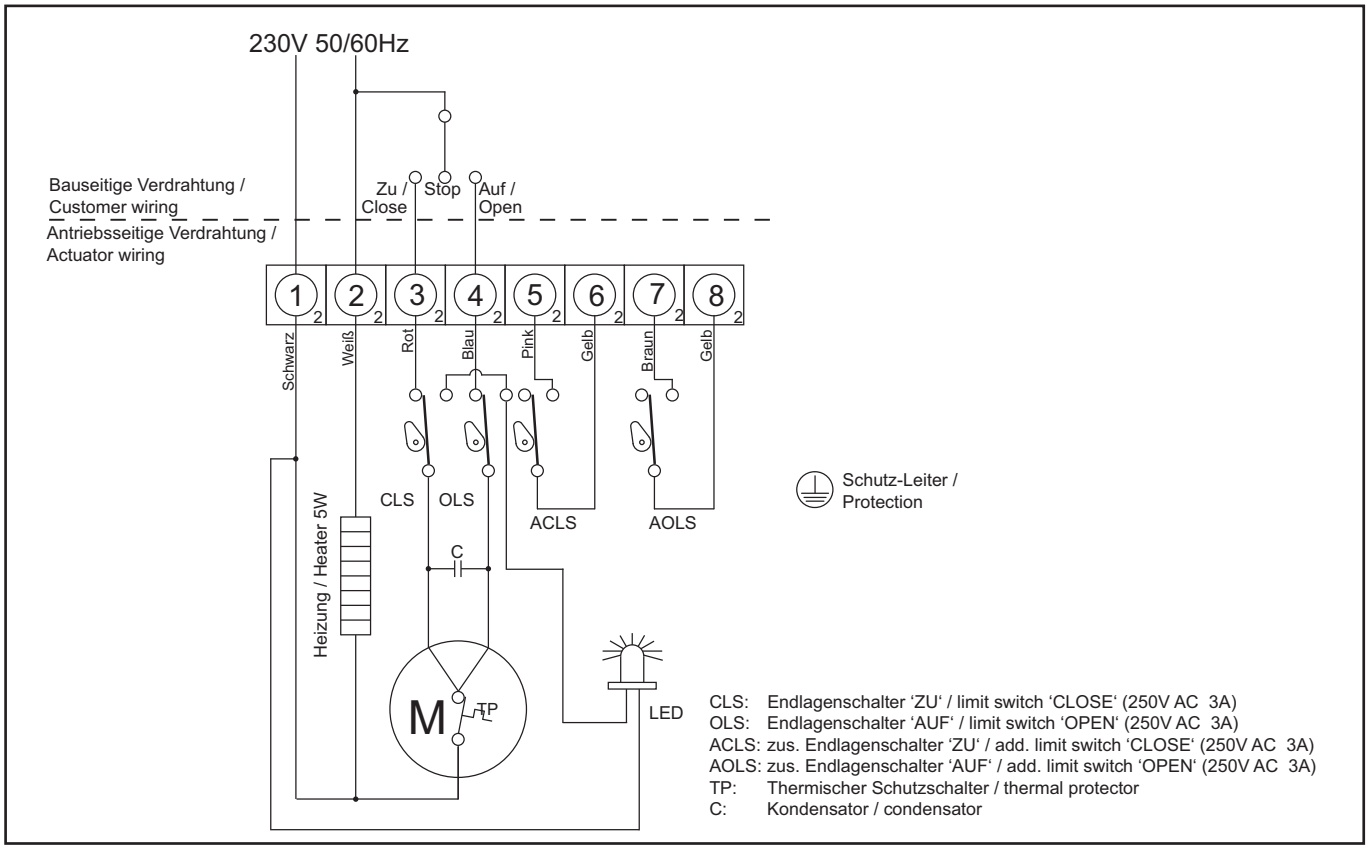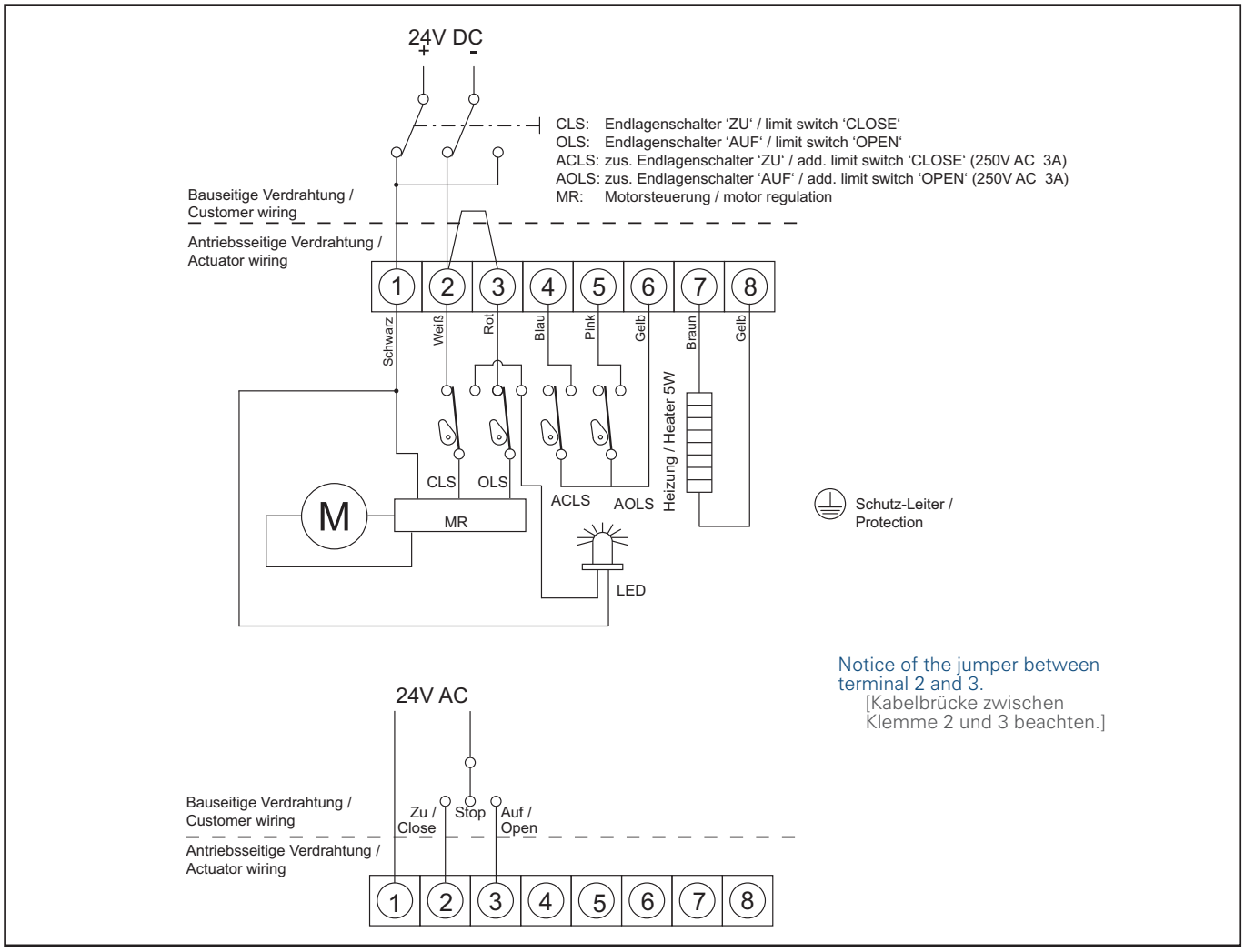Wiring diagram NE005 (50Nm)
[Anschlussplan NE005 (50Nm)]